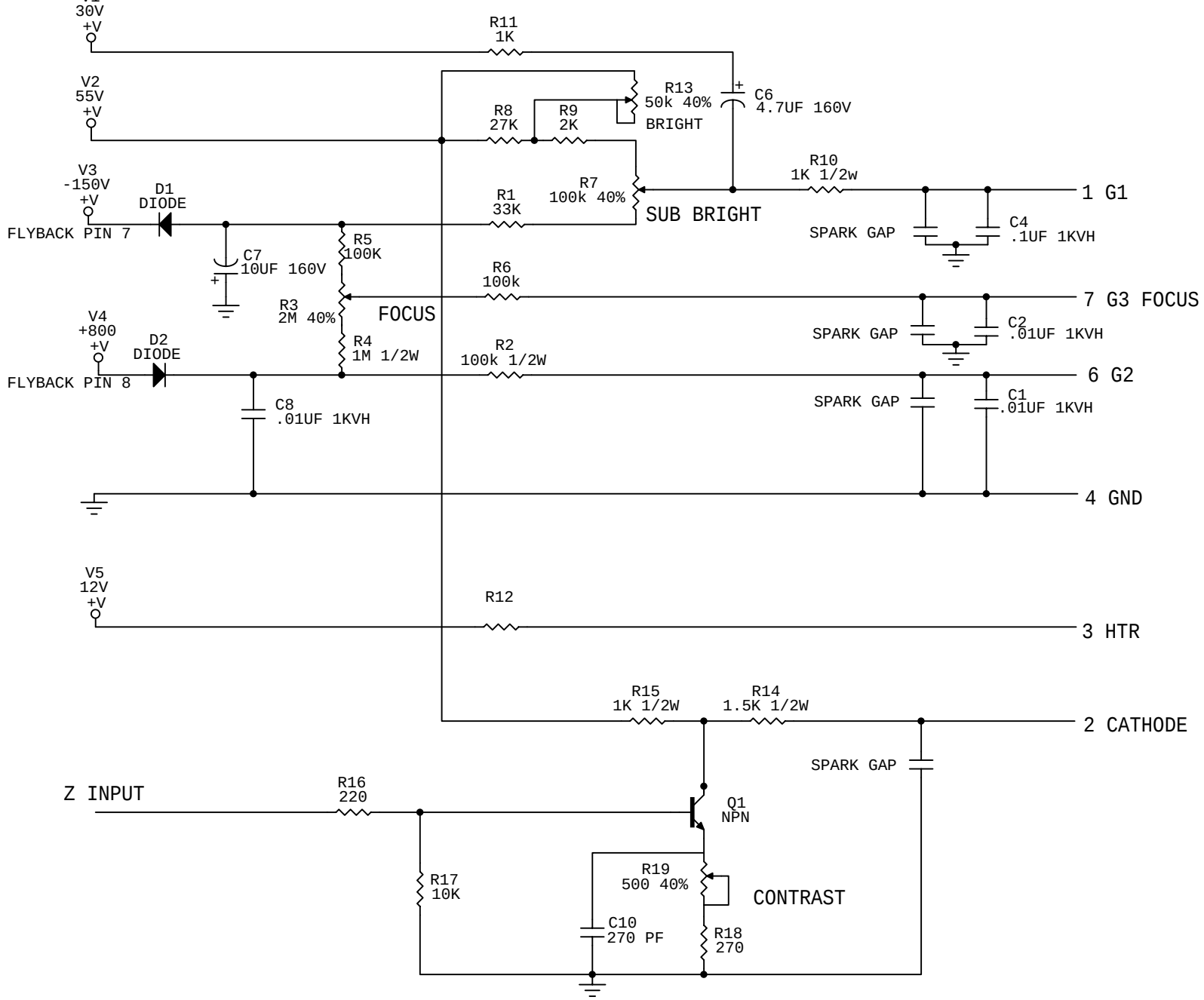
30V
+V
R11
1K
V2
55V
+V
R13
50k 40%
BRIGHT
C6
4.7UF 160V
R8
27K
R9
2K
R10
1K 1/2w
V3
-150V
+V
D1
DIODE
R7
100k 40%
SUB BRIGHT
1 G1
R1
33K
FLYBACK PIN 7
SPARK GAP
C4
.1UF 1KVH
C7
10UF 160V
R5
100K
R6
100k
7 G3 FOCUS
R3
2M 40%
FOCUS
V4
+800
+V
D2
DIODE
SPARK GAP
C2
.01UF 1KVH
R4
1M 1/2W
R2
100k 1/2W
6 G2
FLYBACK PIN 8
SPARK GAP
C1
.01UF 1KVH
C8
.01UF 1KVH
4 GND
V5
12V
+V
R12
3 HTR
R15
1K 1/2W
R14
1.5K 1/2W
2 CATHODE
SPARK GAP
Z INPUT
R16
220
Q1
NPN
R17
10K
R19
500 40%
CONTRAST
C10
270 PF
R18
270